# MAGNETIC LEVITATION HIGH SPEED CENTRIFUGAL BLOWER

High efficiency/energy saving/oil-free/maintenance-free/low noise

Nota Makina

# COMPANY PROFILE

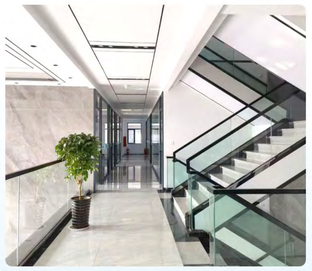

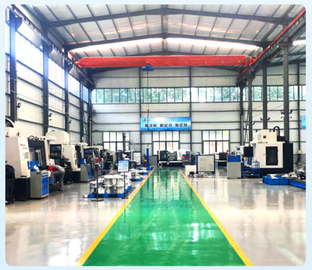

Shandong Huadong Blower Co., Ltd was founded in 2010, located in the beautiful spring city of Jinan, with a registered capital of 100 million yuan, covering an area of 60000 square meters, 60,000 square meters of standard workshop and more than 160 CNC machining center equipment. It is a magnetic levitation equipment manufacturing enterprise integrating professional precision machinery R&D and manufacturing as well as excellent after-sales service. Now we have more than 300 employees and more than 20 doctor and master R&D teams.

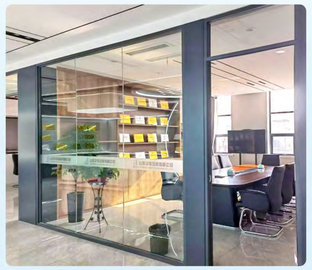

# Development process

### 2007-2008年

- Zhangqiu City Consumer Satisfaction Unit

### 2010-2012年

- Zhangqiu City Advanced Taxpaying Unit
- Top ten tax paying units in Zhangqiu City

### 2014年

- Jinan City's contract-abiding and credit-worthy enterprise
- Jinan famous trademark

### 2015年

- 1S09001 quality management system certification

### 2016年

- Shandong famous trademark
- Civilized and honest private enterprise
- Safety production standardization level three enterprise
- Member unit of Fan Branch of China General Machinery Industry Association

### 2017年

- Worker Pioneer
- Advanced Communist Party Member Business Owner

### 2018-2019年

- Zhangqiu Quality Award
- EU CE certification
- National High-Tech Enterprise
- Hidden Champions “Training Library”
- "Specialized And New" Small and Medium Enterprises in Shandong Province

### 2020年

- EU CE certification
- Environmental management system certification
- Zhangqiu Quality Award-individual Award
- lS09001 quality management system certification
- Occupational Health and Safety Management System Certification
- Member unit of China General Machinery Industry Association branch

### 2021-2022年

- Shandong Province Equipment Manufacturing Industry Science and Technology Innovation Award
- "Energy Efficiency Star" Equipment Product Catalog
- Quality Management System Certification Jinan Advantageous Industrial Products.Catalog
- Green factory

### 2023年

- Excellent energy-saving star
- Key projects in Shandong Province
- Qilu quality products made in Shandong
- National-level specialized and new "little giant" enterprise

# The composition of a structure

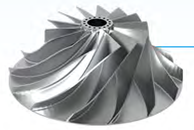

## High-efficiency centrifugal impeller

- Adopt ternary flow theory design and parameter optimization to maximize impeller efficienc and wide working area.
- Centrifugal impeller is made of high-strength forged aluminum or titanium alloy, which has strong resistance to deformation.

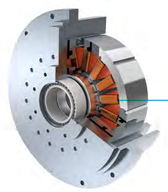

## Magnetic bearing

- No wear / lubrication for high speed operation.
- Monitor rotor status and bearing status.
- No lubrication required, reducing case size and weight.
- Semi-permanent life without maintenance.
- Adopt 5 DOF active magnetic levitation bearing technology to realize rotor suspension by electromagnetic force.

## High speed permanent magnet synchronous motor

- High speed and high power permanent magnet synchronous motor.
- Small motor size, light weight and high power density.
- High motor rotary speed, up to 60,000 rpm.
- Can achieve stepless speed control.
- Motor rotor and impeller are coupled, reducing intermediate energy consumption, low operating failure rate and high transmission efficiecy.

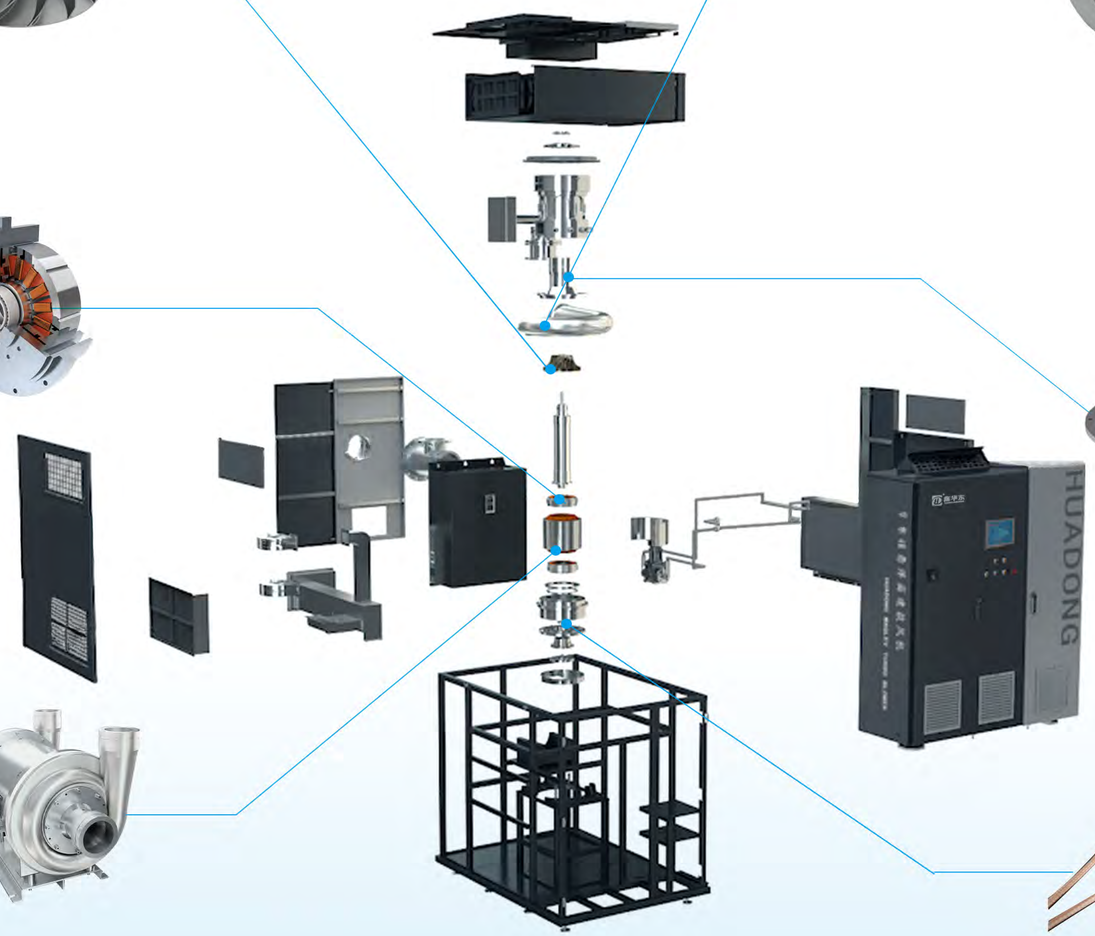


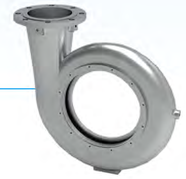

## Volute

- High strength and corrosion resistance
- The inner wall profile is designed as a logarithmic spiral, which has small impact on the blower, small vibration, low noise and high efficiency.
- The function of the volute is to collect the gas from the impeller, guide it to the outlet of the volute, and transport the gas to the pipe. Some volutes convert part of the dynamic pressure of the gas into static pressure.

## Current collector

- The hyperbolic collector accelerates the air flow The airflow evenly fills the inlet section of the
- impeller, reducing the resistance at the blower inlet.

## Position sensor

- The eddy current position sensor independently developed and produced by the company can achieve high-frequency, high-precision accurate detection.
- It has excellent performance of anti-interference, high temperature resistance, impact resistance, and can adapt to various harsh environments.

# Product characteristics and advantages

The magnetic levitation high-speed centrifugal blower is a new type of high-efficiency, energy-saving and environmentally friendly blower that integrates magnetic levitation bearing technology and high-speed motor technology into traditional fans. It has the advantages of simple structure, high efficiency.intelligence, integration, simple operation and maintenance, and low operating costs.

Advantages: It can be widely used in sewage treatment (municipal, industrial and other), material-transportation, food and medicine, textile printing and dyeing, leather and paper making, glass manufacturing, steel metallurgy, flue gas desulfurization and other projects, with significant energy saving effects.

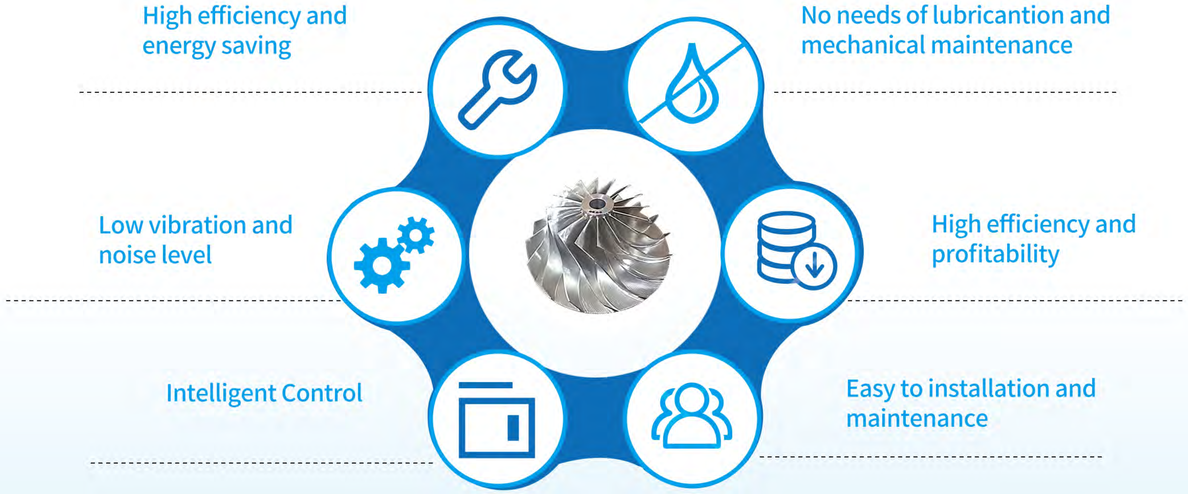

# Product series & specifications

| Magnetic levitation centrifugal blower flow range | | | | | |
|---|---|---|---|---|---|
| Pressure / Model | 40kPa | 60kPa | 80kPa | 100kPa | 120kPa |
| HMGB55 Maximum flow | 66 | 47 | 37 | 31 | / |
| HMGB75 Maximum flow | 85 | 66 | 45.5 | 43 | 37 |
| HMGB90 Maximum flow | 110 | 78 | 60 | 50 | 44 |
| HMGB110 Maximum flow | 135 | 96 | 75 | 63 | 49 |
| HMGB132 Maximum flow | 150 | 107 | 80 | 64.5 | 49 |
| HMGB150 Maximum flow | 186 | 140 | 103 | 74 | 63 |
| HMGB185 Maximum flow | 205 | 150 | 117 | 100 | / |
| HMGB200 Maximum flow | 216 | 172 | 137 | 109 | 80 |
| HMGB250 Maximum flow | 204 | 213 | 170 | 143 | 121 |
| HMGB300 Maximum flow | 210 | 250 | 203 | 170 | 142 |
| HMGB400 Maximum flow | 420 | 340 | 260 | 220 | 185 |

Note: This selection table is for reference only. If you need accurate selection, please send the corresponding parameters to our professional and technical personnel for calculation.

# Working theory

Magnetive levitation centrifugal blower uses the dirct driving structure of high rotary speed permanent magnet motor, designed together with centrifugal impeller and motor driving. It monitors the vibration of shaft and space gap by the motion detector inside. Then it would transfer the signal to the magnetive levitation bearing controlor to adjust, parsing, calculation, and producing controlling current, to transport the current into the magnetive bearing winding coil, and producing electromagnetic force, then realize the levitation of shaft.

The main function of permanent magnet synchronous motor is to driving the rotary of shaft. It produce the frequency controllable currennt, and transport the current into the rotary magnetic field of motor stator, to drive the shaft rotary in a higher speed.

The blower's main function is to boosting air. The impeller, which whirling together with shaft, works on air. Air enters from the inlet collector of the volute, and the air becomes a gas with a certain flow rate and pressure under the guidance and pressurization of the volute, and finally blows out from the air outlet of the volute, to realize a gas delivery process with certain pressure and flow rate.

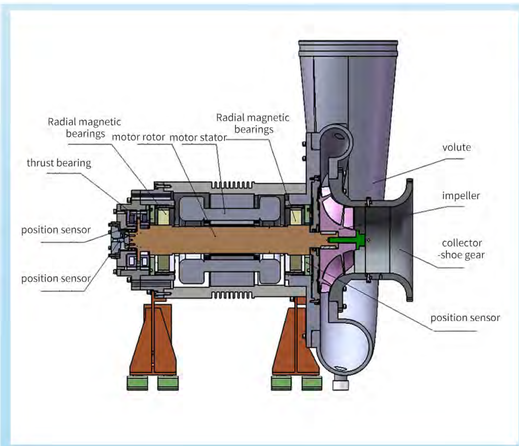

# Performance comparison

| Perfomace comparison | | Roots Blower | Multi-stage centrifugal blower | Single stage centrifugal blower | Huadong air suspension blower | Huadong magnetic levitation blower |
|---|---|---|---|---|---|---|
| Bearing | Bearing | ball bearings | ball bearings | Tilt pad bearing | Foil bearing | Independent domestically produced magnetic bearings, the first to be successfully researched in China, with mature technology and high stability |
| | Source of technology | Domestic | Domestic | Imported/domestic | South Korea | Aerospace and military industry |
| | Life | 1-2 years | 2-3 years | 3-5 years | Semi-permanent | Semi-permanent |
| | Mechanical loss | Bearing energy consumption 2% | Bearing energy consumption 2% | Sliding friction, energy consumption{>} 3% | Friction exists when starting and stopping | Electromagnetic induction, low energyconsumption of bearings |
| Impeller | Form | Casting two or three lobes | Welded carbon steel or cast aluminum | Aluminum alloy, stainless steel or titanium alloy three-dimensional flow impeller | Aviation three-dimensional flow impeller | Aviation three-dimensional flow impeller |
| | Life | 5-8 years | 10 years | 15 years | 20 years | 20 years |
| | Aerodynamic efficiency | Low | Low | A little high | high | high |
| High speed motor | Motor type | Low speed asynchronous motor | Low speed asynchronous motor | Asynchronous AC motor | Independently developed high-speed permanent magnet motor | Independently developed high-speed permanent magnet motor |
| | Transmission form | Belt or coupling | Coupling | Coupling | Direct connectionCoupling | Direct connectionCoupling |
| | Motor efficiency | 86% | 87% | 94% | 95% | 97% |
| | Control speed | No | No | No | Accurate speed regulation | Accurate speed regulation |
| | Type | There is no speedcontrol system, themotor power isconstant, the speed is constant, and the air volume remains unchanged Low speed asynchronous motor | There is no speed control system unless the variable frequencymotor is replaced and avariable frequency controller is added | Guide vane adjustment, mechanical losses | The intelligent DC speed control system changes the shaft speed and air volume | The intelligent DC speed control system changes the shaft speed and air volume |
| | Working range | very small | Very small, can be appropriately relaxed by adding frequency conversion | Flow and pressure adjustment range is small | The flow and pressure adjustment range is relatively large | The flow and pressure adjustment range is relatively large |
| Installation | Basis | Need | Need | Need | Don't need | Don't need |
| Maintenance | Lubricating oil | Inspection every shift, regular additions, medium cost | Inspection every shift, regular additions, medium cost | Inspection every shift, regular additions, high cost | No lubrication required | No lubrication required |
| | Consumable parts | Bearings, gears | Bearings, seals | Bearings, gears, lubricating oil pumps | No lubrication required | No lubrication required |
| | Cost | Low | Medium | High | Low price, prompt service | Low price, prompt service |
| Run | Running cost | Highest | High | Medium | Low | Lowest |
| | Investment cost | Investment cost | Medium | High | High | High |
| Whole machine efficiency | | 57% | 61% | 68% | 76% | 77% |
| Whole machine price | | Lower | Low | Import prices are high | Moderately priced to meet domestic market demand | Moderately priced to meet domestic market demand |
| After-sales maintenance | | Short cycle, low cost, high failure rate | Short cycle, high cost | Maintenance cycle is long and the cost is high | Timely maintenance, independent core components, short maintenance cycle and low cost | Timely maintenance, independent core components, short maintenance cycle and low cost |

# Blower working environment and installation diagram

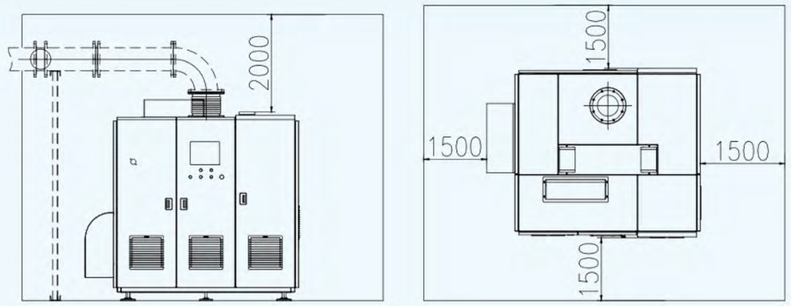


The blower is installed in a relatively clean and dry indoor area with sufficient space to ensure air circulation. Do not install the blower outdoors or exposed to rain, snow, and humidity. If the above conditions are not available, please consult our company before installation.

**01.** The recommended operating ambient temperature of the magnetic levitation centrifugal blower is -10 °C ～ 45 °C. If the ambient temperature is always lower than 0 °C, please add heating equipment in the-blower room; if the a mbient temperature is always higher than 35 ° C, be sure to strengthen the ventilation of the blower room to ensure the indoor heat dissipation;

**02.** In order to ensure the reliable operation of the blower and the convenience of installation and maintenance, there should be a certain amount of space around the blower. The recommended minimum reserved space is shown in the figure. It is recommended that the area of the blower room be appropriately increased to reduce Room echo.

**03.** Subject to the performance of electronic components and fluid components, it is recommended to install the blower at an altitude of less than 1000 meters. If you have to install in an area with an altitude of more than 1000 meters, please consult our engineers before installation;

**04.** The blower should be installed in a place as clean as possible. The dust will shorten the service life of the inlet filter, which will cause the motor to generate severe heat or the filter to be replaced frequently.



# Application area

Widely used in waste water treatment, oil, metallurgy, medicine, coal ,chemical, textile, printing,-food,cement,electric power.

Waste water treatment

Cement

Paper

Printing

Power

Petrochemical

Food

Medicine

Electronics

Electroplating

Steel

# Quality Assurance

## TO WARDS HIGH TECH MANUFACTURING

## PROMOTING HIGH END CNC DEVELOPMENT

Huadong Blower has advanced testing equipment, and implements the manufacturing concept of "design and development - testing and verification - operation optimization - market introduction - continuous innovation", realize the all-round inspection and testing of key design results to magnetic suspension bearings, high-power high-speed permanent magnet synchronous motors, and high-efficiency centrifugal impellers, which guarantees the stability and reliability of the developed magnetic levitation blower.

Huadong Blower always insists on always being better than customers' expectations, creating a timely, professional, pleasant and thoughtful service concept. Everything is based on the mission of exceeding customer needs and is responsible for the results!